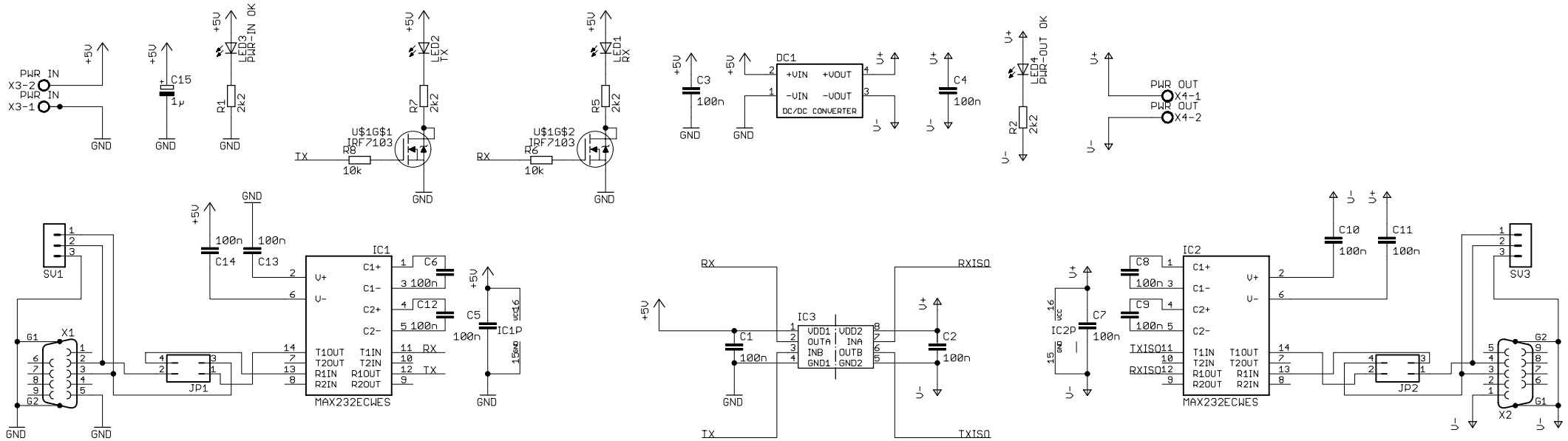
PWR IN
X3-2
PWR IN
X3-1
+5V
GND
C15
1µ
LED3
PWR-IN OK
R1
2k2
LED2
TX
R7
2k2
U$1G$1
IRF7103
R8
10k
TX
LED1
RX
R5
2k2
U$1G$2
IRF7103
R6
10k
RX
C3
100n
DC1
+VIN
+VOUT
-VIN
-VOUT
DC/DC CONVERTER
C4
100n
LED4
PWR-OUT OK
R2
2k2
PWR OUT
X4-1
PWR OUT
X4-2
SV1
X1
G1
G2
JP1
C14
100n
C13
100n
IC1
V+
V-
C1+
C1-
C2+
C2-
T1OUT
T2OUT
R1IN
R2IN
T1IN
T2IN
R1OUT
R2OUT
MAX232ECWES
C6
100n
C12
100n
RX
TX
C5
100n
IC1P
VCC16
GND15
IC3
VDD1
OUTA
INB
GND1
VDD2
INA
OUTB
GND2
C1
100n
C2
100n
RXISO
TXISO
C8
100n
C9
100n
C7
100n
IC2P
VCC
GND
IC2
TXISO
RXISO
C10
100n
C11
100n
SV3
JP2
X2